Product Code:
KMS.UARA.3000.1/1.7.SAEC

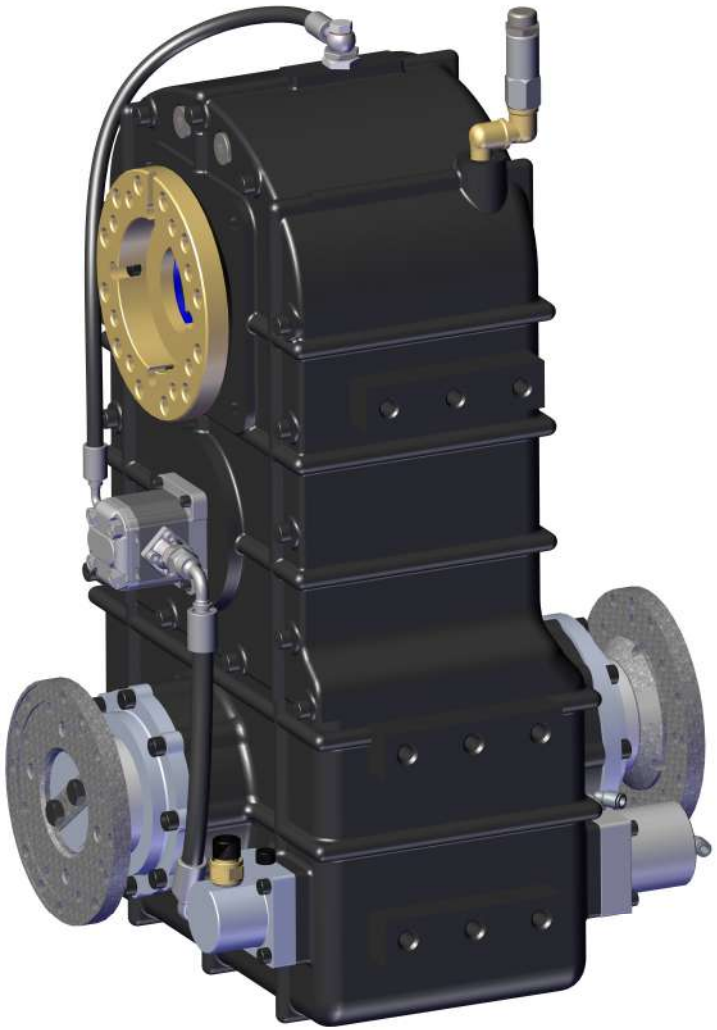

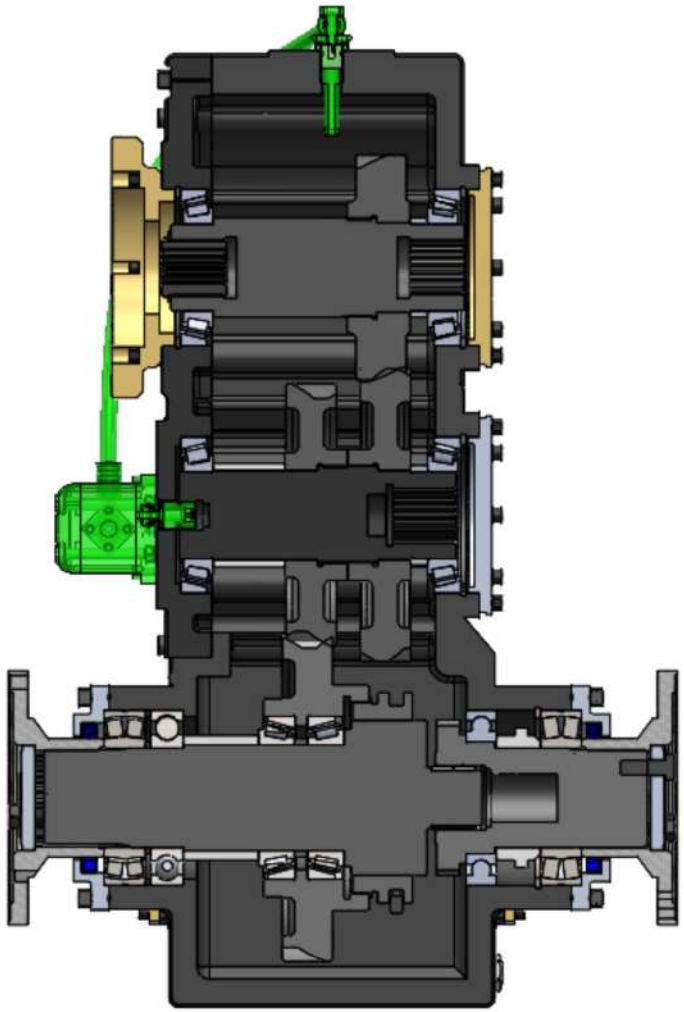

Product Code:
KMS.UARA.3000.1/1.7.SAEC

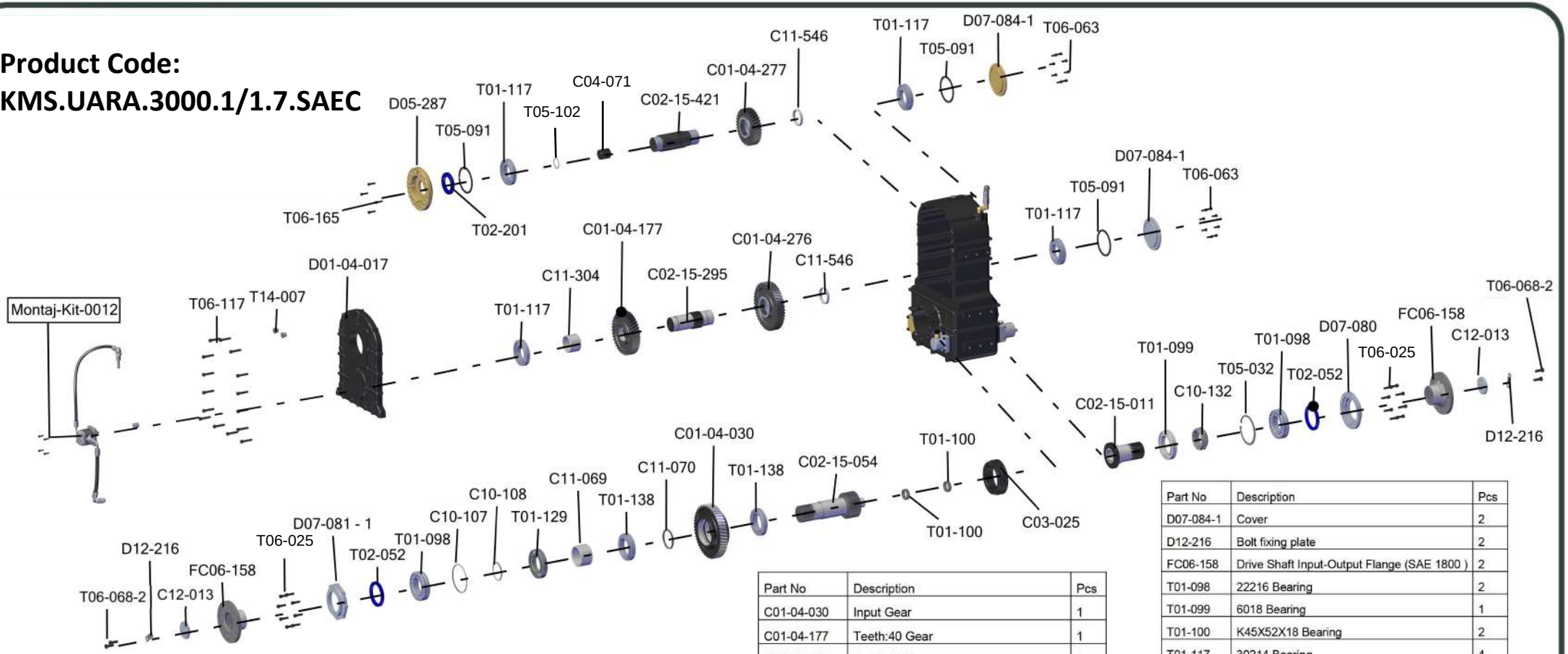

Part No	Description	Pcs
C01-04-030	Input Gear	1
C01-04-177	Teeth:40 Gear	1
C01-04-276	Teeth:45 Gear	1
C01-04-277	Teeth:34 Gear	1
C02-15-011	Output shaft	1
C02-15-054	Input shaft	1
C02-15-295	Center axis shaft	1
C02-15-421	Top shaft with differential side output	1
C03-025	Synchromesh	1
C10-107	Ring	1
C10-108	Ring	1
C10-132	Rpm counter ring	1
C11-069	Gear ring	1
C11-070	Gear ring	1
C11-304	Ring	1
C11-546	Ring	2
C12-013	Flange Ring	2
D01-04-017	Casing Cap	1
D05-287	SAE-C Flange	1
D07-080	Cover	1
D07-081 -1	Input Shaft Seal cover	1

Part No	Description	Pcs
D07-084-1	Cover	2
D12-216	Bolt fixing plate	2
FC06-158	Drive Shaft Input-Output Flange (SAE 1800)	2
T01-098	22216 Bearing	2
T01-099	6018 Bearing	1
T01-100	K45X52X18 Bearing	2
T01-117	30214 Bearing	4
T01-129	6216 Bearing	1
T01-138	32017 Bearing	2
T02-052	95x120x12 Seal Nbr	2
T05-032	472x140 Segment	1
T05-091	472x125 Segment	3
T06-063	M8x20 DIN 912 Bolt	16
T06-068-2	M12X30 DIN 933 Bolt	4
T06-117	M10X50 DIN 912 Bolt	15
T06-025	M10X30 DIN 933 Bolt	16
T06-165	M8x30 DIN 912 Bolt	4
T14-007	R 1/2" Plug	2
T02-201	70x105x13 Seal Nbr	1
T05-102	471x47 Segment	1
C04-071	Spline	1

KMS

Product Code:
KMS.UARA.3000.1/1.7.SAEC

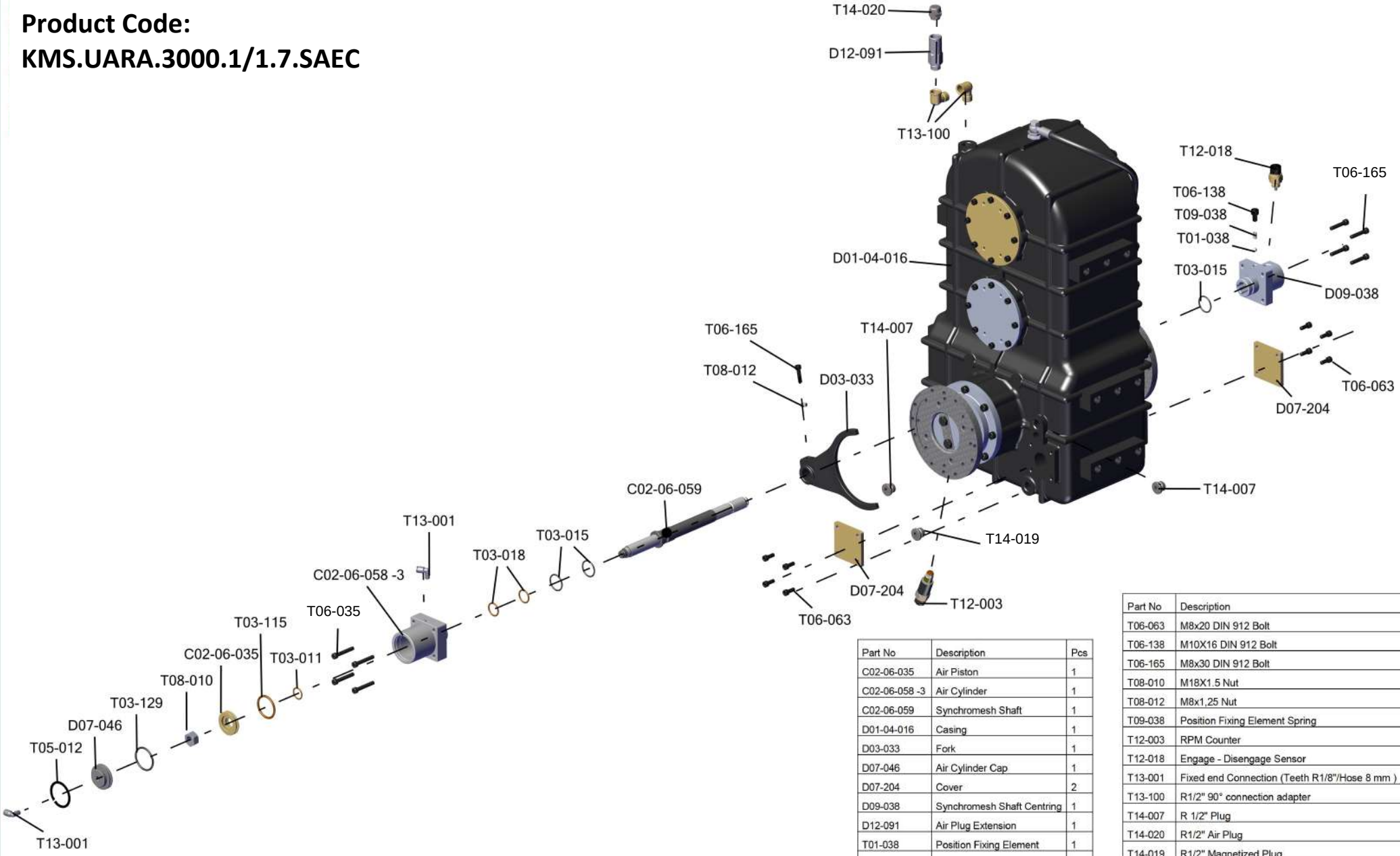

Part No	Description	Pcs
C02-06-035	Air Piston	1
C02-06-058 -3	Air Cylinder	1
C02-06-059	Synchromesh Shaft	1
D01-04-016	Casing	1
D03-033	Fork	1
D07-046	Air Cylinder Cap	1
D07-204	Cover	2
D09-038	Synchromesh Shaft Centring	1
D12-091	Air Plug Extension	1
T01-038	Position Fixing Element	1
T03-011	22x2,62 O-ring	1
T03-015	32X3 O-ring	3
T03-018	25X3 O-ring	2
T03-115	44x4.5 O-ring	1
T03-129	47x4 O-ring	1
T05-012	472x55x2 Segment	1
T06-035	M8X40 DIN 912 Bolt	4

Part No	Description	Pcs
T06-063	M8x20 DIN 912 Bolt	8
T06-138	M10X16 DIN 912 Bolt	1
T06-165	M8x30 DIN 912 Bolt	5
T08-010	M18X1.5 Nut	1
T08-012	M8x1,25 Nut	1
T09-038	Position Fixing Element Spring	1
T12-003	RPM Counter	1
T12-018	Engage - Disengage Sensor	1
T13-001	Fixed end Connection (Teeth R1/8"/Hose 8 mm)	2
T13-100	R1/2" 90° connection adapter	2
T14-007	R 1/2" Plug	2
T14-020	R1/2" Air Plug	1
T14-019	R1/2" Magnetized Plug	1